CAST IRON

Cast Iron

Basic Design Specifications

Class	JIS5K/10K	Class 100/125
Face to face dimension	JIS B2031	ASME B16.10
End flange dimension		ASME B16.1
Wall thickness		KITZ Std.

*Please refer to our website (www.kitz.co.jp) or contact KITZ for details.

Material Specifications for Grey Iron Casting

JIS materials / Mechanical properties	FC200	FC250	FC300
Tensile strength (N/mm²) min.	200	250	300
Brinell hardness (HB) max.	235	248	269

ASTM A126 Class B	Tensile strength (min)	31ksi
Transverse test requirement	Face at center, min.	3,300 lb
	Deflection at center, min.	0.12 in

ASME Valves Pressure-Temperature Ratings

Maximum Allowable Non-Shock Pressure

Service temperature			Class 125			
			Size 2B to 12B		Size 14B to 24B	
°F	°C		Psi.	MPa	Psi.	MPa
-20 to 150	-29 to 66		200	1.37	150	1.03
200	93		190	1.30	135	0.93
225	107		180	1.24	130	0.89
250	121		175	1.20	125	0.86
275	135		170	1.17	120	0.82
300	149		165	1.13	110	0.75
325	163		155	1.06	105	0.72
350	177		150	1.03	100	0.69
375	191		145	1.00		
400	204		140	0.96		
425	218		130	0.89		
450	232		125	0.86		
Saturated steam			125	0.86	100	0.69
Test pressure	Hydro-static	Shell	350	2.41	265	1.83
		Seat	220	1.51	165	1.13
	Air	Seat	80	0.59	80	0.59

Remarks:

(1) All pressures are given in pounds per square inch gage (PSIG).

(2) Pressure-temperature ratings extracted from MSS SP-70, 71, 85 apply to iron flanged end valves designed for primary working pressures in Class 125.

PN Series Valves Pressure-Temperature Ratings

Maximum permissible working pressure (bar)

Service temperature (°C)	Cast ironvalves
	PN16
-10 to 66	16
100	
120	
150	14.4
170	13.7
180	13.4
186	13.2
198	12.9
200	12.8

(Note) : Intermediate values may be obtained by linear interpolation.

Simplified Material Indication (as referred to in each page)

Bronze trim : Iron body with bronze trim

13 Cr. trim : Iron body with 13 Cr. trim

18-8 trim : Iron body with 18 Cr.-8 Ni trim

Certification by JIS Mark

The Industrial Standardization Law of Japan provides an effective measure to promote the introduction of a high-level quality assurance system of manufacture and processing. KITZ valves that are identified with the JIS Mark are officially certified as being produced under strict quality assurance procedures and practices to satisfy the designated quality level stably and constantly.

Valve Position Indicators

A valve position indicator is provided on gate valves with an inside screw design as illustrated here. Opening or closing the valves does not move the vertical position of the handwheel. Instead, the position indicator visually indicates three valve operating positions: fully opened, fully closed, or half opened.

Trim Materials

KITZ cast iron valves are provided with any one of the three trim materials listed below for versatility of service applications.

Color coding is made on a spoke of the handwheel of the gate or globe valves and on the cover of swing check valves.

Trim material	Color coding	Suffix of Fig.
■ Bronze seats / Brass stem	None	–
■ 13 Cr. seats / stem	Yellow	S
■ 18-8 seats / stem	Red	U

Conditions of Fluids and Maximum Permissible Pressures

Unit: MPa

Standards		5 K	10 K				10 K	
Nominal pressure		JIS B2031	JIS B2031				KITZ standard	
Valve type		Outside screw gate valve	Outside screw gate valve	Glove valve, Swing check valve		Inside screw gate valve	Valve 350 A or more	FC300 valve
Disc seat structure		Press-fit seat	Screw seat	Screw seat		Press-fit seat	Screw seat	Press-fit seat
Main section		CAC406	CAC 406 13 chrome 18-8 stainless steel	CAC 406	13 chrome 18-8 stainless steel	CAC 406	CAC 406 13 chrome 18-8 stainless steel	CAC 406 13 chrome
Maximum permissible working pressure	Steady flow below 120 degrees in centigrade	0.7	1.4	1.4	–	1.4	1.0	1.0
	Oil, pulsating flow and water below 120 degrees in centigrade	0.5	1.0	1.0	–	1.0	0.9	0.9
	Saturated steam*1	0.2	0.7	0.7	–	0.2	0.7	0.7
	Gas below 120 degrees in centigrade	0.2	0.2	0.2	–	0.2	0.2	0.2
	120 degrees in centigrade	–	–	–	1.4	–	–	–
	220 degrees in centigrade	–	–	–	1.0	–	–	–

*1 When the main section is made of 18-8 stainless steel and used for steam piping, it is necessary to weld hardened metal cladding on the seat surface.
Please designate the same together with the steam specification.
When it is used for saturated steam at a pressure of 0.5 MPa or more, please designate accordingly.

*2 Such gases as set forth in the High Pressure Gas Safety Act shall be excluded.
Gases—Gases other than flammable and toxic gases

Outside Screw (O.S.) Valves and Inside Screw (I.S.) Valves

Outside Screw Gate Valve

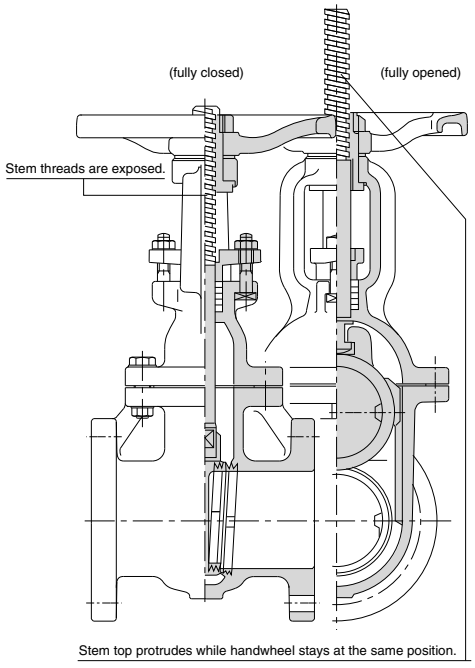

Inside Screw Gate Valve

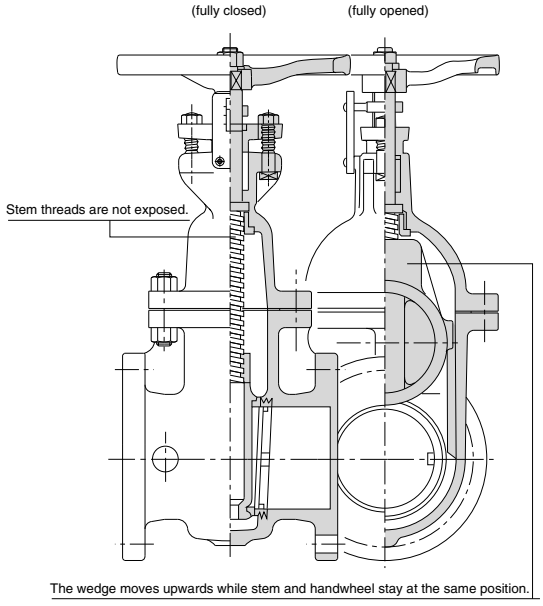

Outside Screw Gate Valves

The stem threads are exposed to air, and the valve opening operation moves the stem upward while the handwheel stays at the same position. The valve operating position can be visually known by observing the stem travel. KITZ Figs. FCM, FCL, FCLS and FCLU are designed this way.

Outside Screw Globe Valves

The stem and handwheel move upward or downward simultaneously, following the valve opening or closing operation. All KITZ globe valves have this design.

Inside Screw Gate Valves

The stem threads are not exposed to air and the valve opening operation does not cause movement of the stem or handwheel, and so, the valve operating position is not visible. A position indicator is provided for this reason.

Inside screw gate valves are generally designed to be shorter than outside screw gate valves and the stem and handwheels always stay at the same position. On account of this feature, inside screw gate valves are widely employed for underground installation or for service in narrow areas with limited room. KITZ Figs. FCWI and FCHI are designed this way.

Asbestos-free Packings and Gaskets

KITZ has led the industry in employing asbestos-free sealers for all cast iron valves, meeting the requirement of pollution-free valve materials. PTFE-impregnated glass fiber gland packings and compressed glass and aramid fiber gaskets are the standard sealers for KITZ cast iron valves.

Product Coding

125 FC L S

(1) (2) (3) (4)

(1) Valve class
- **100** ..... Class 100
- **125** ..... Class 125
- **5** ..... JIS 5K
- **10** ..... JIS 10K
- **EN16** PN16

(2) Symbol of shell material
- **FC** ..... Cast Iron

(3) Type of valve
- **L** ..... Gate valve
- **WI & HI** ... Gate valve with indicator
- **J** ..... Globe valve
- **O** ..... Check valve
- **TB** ..... Full port ball valve
- **TR** ..... Reduced port ball valve

(4) Trim material
- **None** ... Bronze trim
- **U** ..... Type 304 stainless steel
- **S** ..... Type 403 stainless steel
- **M** ..... Type 316 stainless steel

NOTE		
	B.B. ..... **Bolted bonnet**	**I.S.** ..... **Inside screw**
	O.S.&Y ... **Outside screw & yoke**	**N.R.S.** ..... **Non-rising stem**

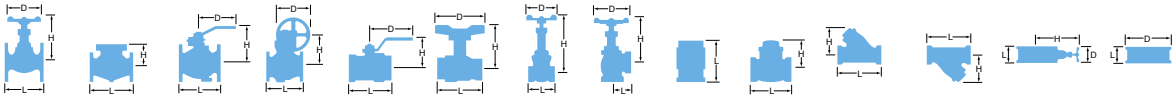

TYPE			GATE			GATE			GATE			GATE			GATE		
Cast Iron																	
FIG			10FCHI			10FCL			10FCLS			125FCHI			125FCL		
PRESSURE			10K			10K			10K			Class 125			Class 125		
END CONNECTION			JIS B2239			JIS B2239			JIS B2239			ASME B16.1			ASME B16.1		
DIMENSIONS	inch	mm	L	H	D	L	H	D	L	H	D	L	H	D	L	H	D
	1½	40	140	210	140	165	306	160	165	306	160	140	210	140	–	–	–
	2	50	146	250	140	180	343	170	180	343	170	146	250	140	178	328	160
	2½	65	159	285	160	190	389	170	190	389	170	159	285	160	190	382	170
	3	80	165	350	160	200	462	200	200	462	200	165	350	160	203	436	170
	4	100	171	400	180	230	547	250	230	547	250	171	400	180	229	532	225
	5	125	190	460	225	250	648	280	250	648	280	190	465	225	254	627	225
	6	150	210	515	225	270	759	300	270	759	300	210	515	225	267	726	250
	8	200	241	635	300	290	956	350	290	956	350	241	630	300	292	919	280
	10	250	273	760	350	330	1168	400	330	1168	400	–	–	–	330	1134	350
	12	300	305	870	350	350	1363	450	350	1363	450	–	–	–	356	1363	450
	14	350	–	–	–	381	1560	500	381	1560	500	–	–	–	381	1560	500
	16	400	–	–	–	–	–	–	406	1795	600	–	–	–	–	–	–
	18	450	–	–	–	–	–	–	432	1995	600	–	–	–	–	–	–
	20	500	–	–	–	–	–	–	457	2230	680	–	–	–	–	–	–
	22	550	–	–	–	–	–	–	508	2640	760	–	–	–	–	–	–
BODY			Cast Iron			Cast Iron			Cast Iron			Cast Iron			Cast Iron		
BONNET			Cast Iron			Cast Iron			Cast Iron			Cast Iron			Cast Iron		
STEM			Forged Brass			Forged Brass			SUS403			Forged Brass			Forged Brass		
DISC			Cast Iron			Cast Iron			Cast Iron			Cast Bronze			Cast Bronze		
SEAT			–			–			BS:SUS403			–			–		

TYPE			GATE			GATE			GLOBE			GLOBE			GLOBE		
Cast Iron																	
FIG			125FCLS			125FCWI			10FCJ			10FCJS			125FCJ		
PRESSURE			Class 125			Class 125			10K			10K			Class 125		
END CONNECTION			ASME B16.1			ASME B16.1			JIS B2239			JIS B2239			ASME B16.1		
DIMENSIONS	inch	mm	L	H	D	L	H	D	L	H	D	L	H	D	L	H	D
	1½	40	–	–	–	–	–	–	190	260	160	190	260	160	–	–	–
	2	50	178	328	160	178	250	140	200	277	180	200	277	180	203	277	180
	2½	65	190	382	170	190	285	160	220	307	180	220	307	180	216	307	180
	3	80	203	436	170	203	350	160	240	353	225	240	353	225	241	353	225
	4	100	229	532	225	229	400	180	290	404	280	290	404	280	292	404	280
	5	125	254	627	225	254	465	225	360	467	300	360	454	300	330	467	300
	6	150	267	726	250	267	515	225	410	533	350	410	533	350	356	533	350
	8	200	292	919	280	292	630	300	500	642	450	500	642	450	495	620	450
	10	250	330	1134	350	330	760	350	–	–	–	620	665	450	–	–	–
	12	300	356	1363	450	356	870	350	–	–	–	700	883	500	–	–	–
	14	350	381	1560	500	–	–	–	–	–	–	–	–	–	–	–	–
	16	400	–	–	–	–	–	–	–	–	–	–	–	–	–	–	–
	18	450	–	–	–	–	–	–	–	–	–	–	–	–	–	–	–
	20	500	–	–	–	–	–	–	–	–	–	–	–	–	–	–	–
	22	550	–	–	–	–	–	–	–	–	–	–	–	–	–	–	–
BODY			Cast Iron			Cast Iron			Cast Iron			Cast Iron			Cast Iron		
BONNET			Cast Iron			Cast Iron			Cast Iron			Cast Iron			Cast Iron		
STEM			SUS403			Forged Brass			Forged Brass			SUS403			Forged Brass		
DISC			Cast Bronze			Cast Iron			Cast Bronze			Cast Bronze			Cast Bronze		

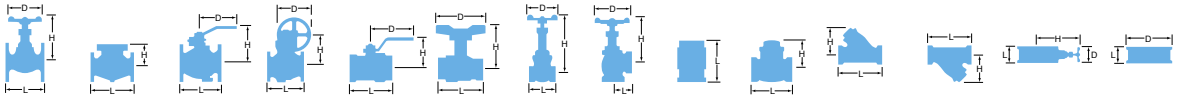

TYPE			GLOBE			SWING CHECK			SWING CHECK			SWING CHECK			WAFER CHECK		
Cast Iron																	
FIG			125FCJS			10FCO			10FCOC			125FCO			10FWZ		
PRESSURE			Class 125			10K			10K			Class 125			10K		
END CONNECTION			ASME B16.1			JIS B2220			JIS B2220			ASME B16.1			Wafer Type		
DIMENSIONS	inch	mm	L	H	D	L	H	D	L	H	D	L	H	D	L	H	D
	1½	40	–	–	–	190	106	140	–	–	–	–	–	–	54	128	55
	2	50	203	277	180	200	111	155	200	116	155	203	111	152	56	143	70
	2½	65	216	307	180	220	121	175	220	126	175	216	121	178	56	150	70
	3	80	241	353	225	240	145	185	240	153	185	241	145	190	59	156	70
	4	100	292	404	280	290	165	210	290	170	210	292	165	229	66	169	70
	5	125	330	467	300	360	207	250	360	217	250	330	207	254	72	183	70
	6	150	356	533	350	410	225	280	410	235	280	356	225	279	78	216	80
	8	200	495	620	450	500	268	330	500	273	330	495	268	343	96	243	80
	10	250	–	–	–	620	315	400	–	–	–	622	315	406	109	290	90
	12	300	–	–	–	700	356	445	–	–	–	–	–	–	145	315	90
	14	350	–	–	–	–	–	–	–	–	–	–	–	–	184	330	90
	16	400	–	–	–	–	–	–	–	–	–	–	–	–	191	355	90
	18	450	–	–	–	–	–	–	–	–	–	–	–	–	204	388	90
	20	500	–	–	–	–	–	–	–	–	–	–	–	–	–	–	–
	24	600	–	–	–	–	–	–	–	–	–	–	–	–	–	–	–
BODY			Cast Iron			Cast Iron			Cast Iron			Cast Iron			Cast Iron+NBR		
BONNET			Cast Iron			–			–			–			–		
COVER			–			Cast Iron			Cast Iron			Cast Iron			–		
STEM			SUS403			–			–			–			–		
HINGE PIN			–			Forged Brass			Forged Brass			Forged Brass			SUS304		
DISC			Cast Bronze			Cast Bronze			Cast Bronze			Cast Bronze			Cast Bronze		

TYPE			WAFER CHECK			WAFER CHECK			WAFER CHECK			WAFER CHECK		
Cast Iron														
FIG			125FWNB			125FWNBE			PN16FWNBM			PN16FWNBME		
PRESSURE			Class 125			125FWNBE			PN16			PN16		
END CONNECTION			Wafer Type			Wafer Type			Wafer Type			Wafer Type		
DIMENSIONS	inch	mm	L	H	D	L	H	D	L	H	D	L	H	D
	1½	40	–	–	–	–	–	–	–	–	–	–	–	–
	2	50	54	–	105	54	–	105	–	–	–	–	–	–
	2½	65	54	–	124	54	–	124	–	–	–	–	–	–
	3	80	57	–	137	57	–	137	–	–	–	–	–	–
	4	100	64	–	175	64	–	175	–	–	–	–	–	–
	5	125	70	–	197	70	–	197	–	–	–	–	–	–
	6	150	76	–	222	76	–	222	–	–	–	–	–	–
	8	200	95	–	279	95	–	279	–	–	–	–	–	–
	10	250	108	–	340	108	–	340	–	–	–	–	–	–
	12	300	143	–	410	143	–	410	–	–	–	–	–	–
	14	350	–	–	–	–	–	–	184	–	446	184	–	446
	16	400	–	–	–	–	–	–	191	–	498	191	–	498
	18	450	–	–	–	–	–	–	203	–	558	203	–	558
	20	500	–	–	–	–	–	–	213	–	620	213	–	620
	24	600	–	–	–	–	–	–	222	–	737	222	–	737
BODY			Cast Iron			Cast Iron			Cast Iron			Cast Iron		
BONNET			–			–			–			–		
HINGE PIN			Steinless Steel			Steinless Steel			TYPE 304			TYPE 304		
DISC			Bronze			Bronze			CF8M			CF8M		
SEAT			NBR			EPDM			NBR			EPDM		

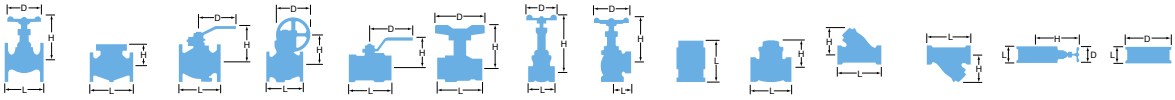

TYPE			Y TYPE STRAINER			Y TYPE STRAINER		
Cast Iron								
FIG			10FCY			125FCY		
PRESSURE			10K			Class 125		
END CONNECTION			JIS B2220			ASME B16.1		
DIMENSIONS	inch	mm	L	H	D	L	H	D
	3/8	10	115	46	–	–	–	–
	1/2	15	125	57	–	–	–	–
	3/4	20	140	63	–	–	–	–
	1	25	150	77	–	–	–	–
	1 1/4	32	170	90	–	–	–	–
	1 1/2	40	190	100	–	–	–	–
	2	50	230	127	–	250	168	–
	2 1/2	65	305	208	–	285	212	–
	3	80	360	237	–	315	242	–
	4	100	415	280	–	370	284	–
	5	125	465	325	–	420	325	–
	6	150	515	370	–	490	370	–
	8	200	580	457	–	570	440	–
	10	250	680	536	–	680	515	–
	12	300	800	625	–	800	600	–
	14	350	950	741	–	950	740	–
BODY			Cast Iron			Cast Iron		
COVER			Cast Iron			Cast Iron		
STEM			–			–		
DISC			–			–		
SCREEN			SUS304			SUS304		